Katrin Waste Bin 40 l

4287

- Waste bin that holds 40 litres of paper, which means that the toilet environment stays clean.
- Made from ABS Plastic (white).
- Can be wall mounted, freeing up floor space.
- Light, robust and simple to empty.

ISO 9001 ISO 14001

Product

x 320 mm	
y 500 mm	
z 250 mm	
White	
0.2 kg	

Transport package

x 350 mm	
y 880 mm	
z 555 mm	
6	
1.7 kg	
VE	
6414301004287	

Pallet information

x 800 mm	
y 2250 mm	
z 1200 mm	
9	
40,6 kg	
6414301004294	

Dimensions

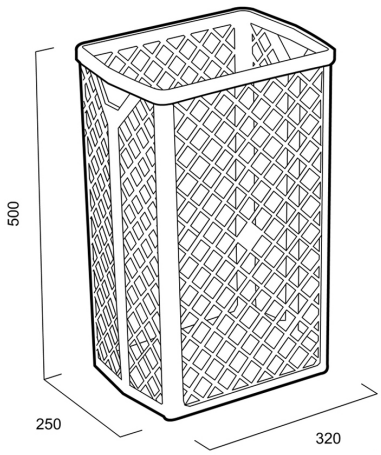

Positioning guide

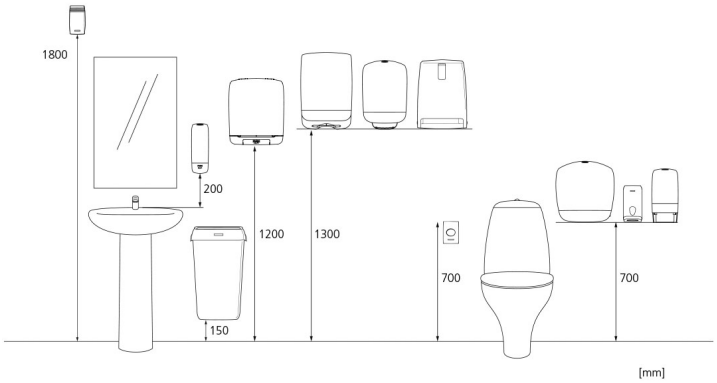

Copyright © Metsä Tissue Corporation